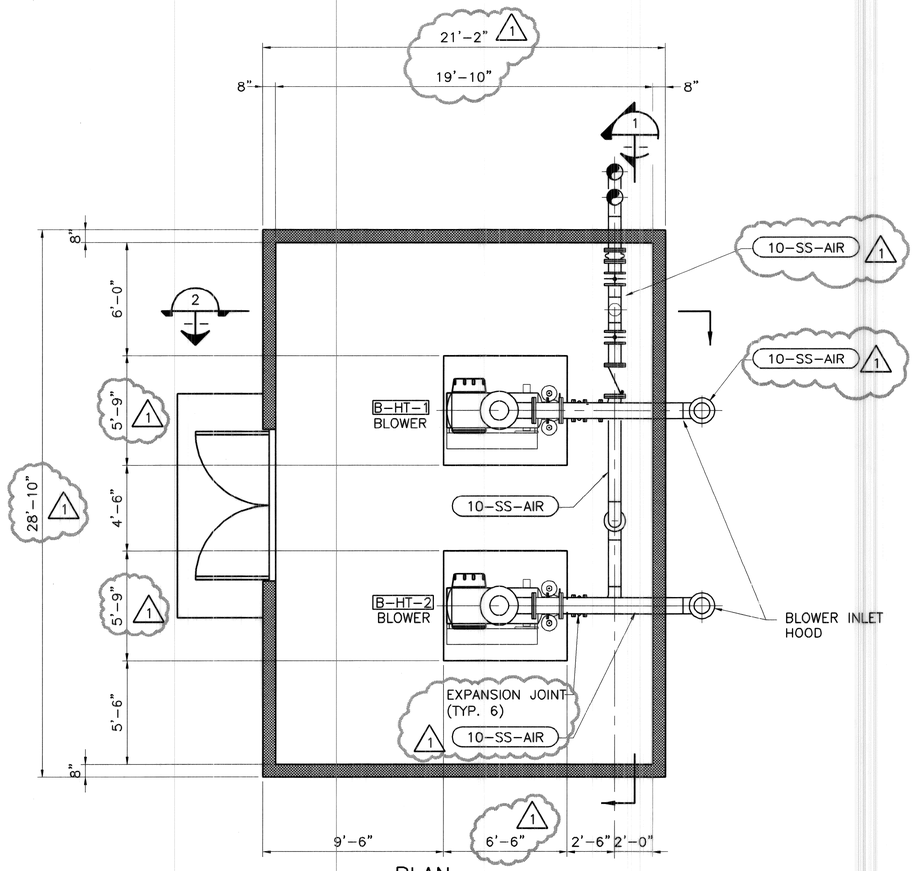

PLAN
1/4"=1'-0"

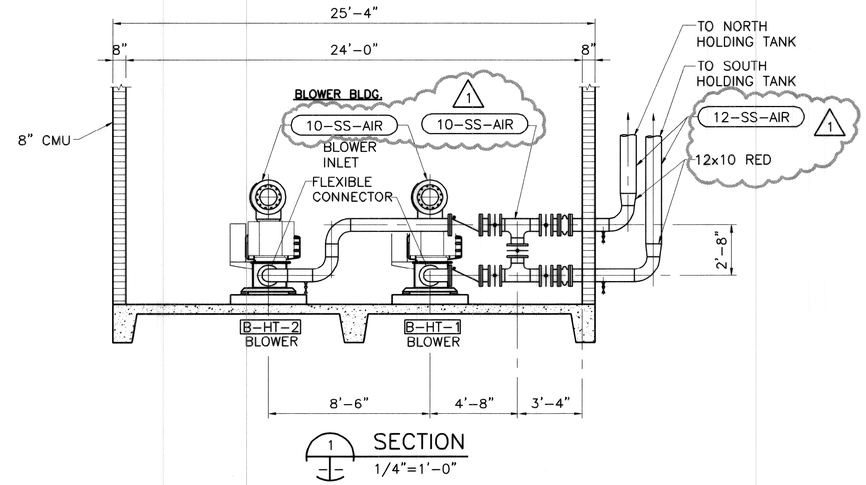

SECTION
1/4"=1'-0"

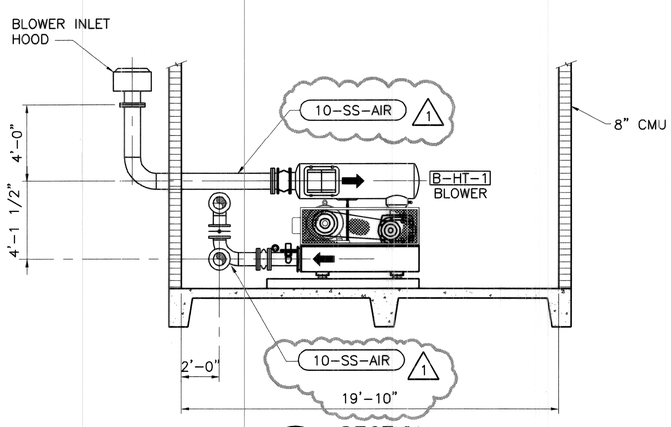

SECTION
1/4"=1'-0"

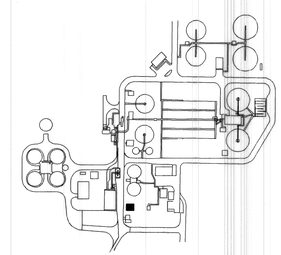

KEY MAP

4' 0 4' 8'
1/4"=1'-0"

This Record Drawing is a combination of the sealed and signed original drawings for this project, modified by addenda, change orders, field order and information furnished by the contractor. The information shown on the Record Drawings is believed to be accurate based on our review of observations performed during construction and information furnished by others. The original sealed drawings are on file at the offices of

FREESE AND NICHOLS, INC.
4055 INTERNATIONAL PLAZA, SUITE 200
FORT WORTH, TEXAS 76109
(817) 735-7300
RECORD DRAWINGS PREPARED ON:
1/12/2004

IT IS THE PROPERTY OF/VESTED IN THIS DOCUMENT WAS AUTHORED BY JAMES A. LAND, P.E. TEXAS NO. 61895 ON 01/12/2004 WITHOUT PROPER NOTIFICATION OF THE RESPONSIBLE ENGINEER IS AN VIOLATION OF THE TEXAS ENGINEERING PROFESS. ACT.

IT IS THE PROPERTY OF/VESTED IN THIS DOCUMENT WAS AUTHORED BY JAMES A. LAND, P.E. TEXAS NO. 61895 ON 01/12/2004 WITHOUT PROPER NOTIFICATION OF THE RESPONSIBLE ENGINEER IS AN VIOLATION OF THE TEXAS ENGINEERING PROFESS. ACT.

FREESE • NICHOLS
4055 International Plaza•Suite 200
Fort Worth, Texas 76109-4895
817•735•7300

CITY OF SAN ANGELO, TEXAS
WASTEWATER TREATMENT PLANT SLUDGE MANAGEMENT IMPROVEMENTS
SLUDGE HOLDING TANKS
BLOWER BUILDING PLAN

F&N JOB NO.	SAN00132
FILE	HT-DET1
DATE	AUG. 2001
DESIGNED	ICA
DRAWN	SB
REVISED	
CHECKED	HIM

NO.	REVISION	BY	DATE
1	RECORD DWG WITH CHANGES	JAS	1/30/04

VERIFY SCALE 0 1
Bar is one inch on original drawing. If not one inch on this sheet, adjust scale.

SHEET HT-5
SEQ. 113

ACAD Rel 15.06s (LMS Tech) User: SB
[SAN00132]N:\ENV\HT-DET1.DWG LTS: 1.00 PSLTS: 1 TWIST: 0.0
AUG 02, 2001 4:03:08 P.M.
7 REFERENCE FILES: 42234, 59701, 61895, 69443, 81011, 84750 and N:\BORDER

Account=SAN00132 File: N:\RECORD\ENV\HT-DET1.DWG
Date: Feb 23, 2004 - 10:00am User: jas ACAD release: R15.06s (LMS Tech)