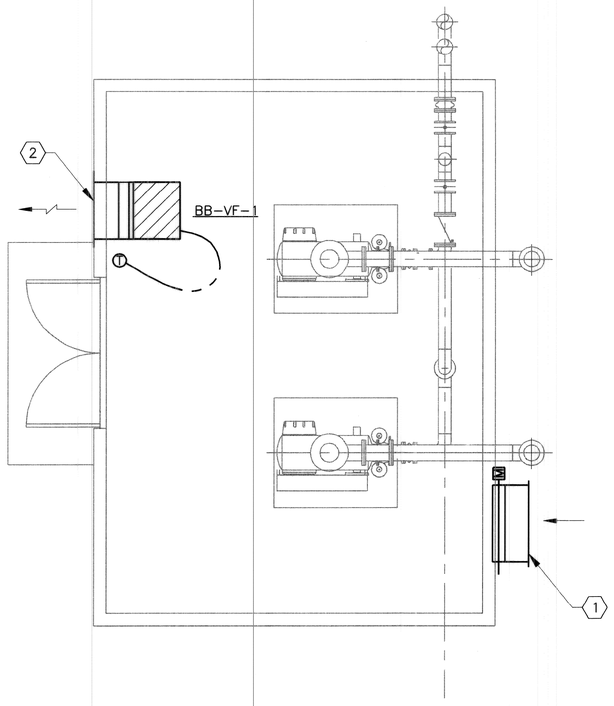

NORTH

1 HT-9 | HT-9 HVAC BLOWER BUILDING PLAN
1/4"=1'-0"

FAN SCHEDULE

MARK	SERVES	SCFM	EXT SP IN. WG	MOTOR DATA					MAX. SONES	MANUFACTURER AND MODEL NO.	REMARKS
				HP	RPM	VOLTS	PH	HZ			
BB-VF-1	GRAVITY BELT	2,700	0.375	1/3	1150	480	3	60	21	COOK20XMW	① ② ③ ④

① PROVIDE SAFETY DISCONNECT SWITCH
② PROVIDE OSHA APPROVED GUARDS
③ WALL PROPELLER FAN
④ PROVIDE WITH EPOXY COATING

GENERAL NOTES:

1. REFER TO SHEET G-4 FOR HVAC LEGEND AND ABBREVIATIONS.
2. REFER TO SHEETS SD-18 AND SD-19 FOR HVAC DETAILS.

NOTES BY SYMBOL "⬡"

1. INTAKE LOUVER (W/INSECT SCREEN) TO BE LOCATED APPROXIMATELY 16" ABOVE FINISH FLOOR. PROVIDE WITH 9.8 SQUARE FEET (MINIMUM) AREA. REFER TO ARCHITECTURAL DRAWINGS.
2. EXHAUST LOUVER WITH INSECT SCREEN. TOP OF LOUVER AT BEAM JOINT. PROVIDE WITH 6.3 SQUARE FEET (MINIMUM) AREA. REFER TO ARCHITECTURAL DRAWINGS.

SEQUENCE OF CONTROLS

VENTILATION FAN
(HT-VF-1)

A SINGLE SPACE THERMOSTAT WILL ENERGIZE AND OPEN THE INTAKE LOUVER MOTORIZED DAMPER WHEN SPACE TEMPERATURE EXCEEDS 85°F (ADJUSTABLE) SETPOINT. AFTER A TIME DELAY OF (2) TWO MINUTES (ADJUSTABLE) VENT FANS SHALL ENERGIZE.

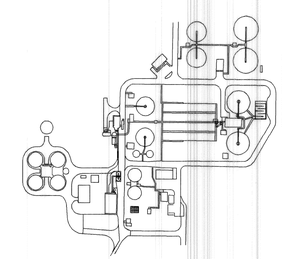

KEY MAP

4' 0 4' 8'
1/4"=1'-0"

This Record Drawing is a combination of the sealed engineering contract drawings for this project, modified by addenda, change order, field order and information furnished by the contractor. We cannot guarantee that the information on these drawings is believed to be accurate based on our observations performed during construction and information furnished by others. The original sealed drawings are on file in the offices of:
FREESE AND NICHOLS, INC.
4055 INTERNATIONAL PLAZA, SUITE 200
FORT WORTH, TEXAS 76109-4895
(817) 735-7300
RECORD DRAWINGS PREPARED ON:
1/12/2004

THE SEAL HAS ORIGINALLY APPLIED ON THIS DOCUMENT WAS AUTHORIZED BY RONALD W. JAMES, P.E.
ALTERATION OF A SEALED DOCUMENT WITHOUT PROPER AUTHORITY MAY BE A VIOLATION OF STATE LAW. ALTERATION OF A SEALED DOCUMENT IS NOT A PROFESSIONAL OFFENSE UNDER THE TEXAS ENGINEERING PRACTICE ACT.

FREESE • NICHOLS
4055 International Plaza • Suite 200
Fort Worth, Texas 76109-4895
817•735•7300

CITY OF SAN ANGELO, TEXAS
WASTEWATER TREATMENT PLANT SLUDGE MANAGEMENT IMPROVEMENTS
SLUDGE HOLDING TANK
HVAC BLOWER BUILDING PLAN

F&N JOB NO. SAN00132
FILE HT-8.DWG
DATE AUG. 2001
DESIGNED RCE
DRAWN RCE
REVISED
CHECKED DWL

NO.	REVISION	BY	DATE

RECORD DWG WITHOUT CHANGES JAS 1/30/04

VERIFY SCALE 0 1
Bar is one inch on original drawing. If not one inch on this sheet, adjust scale.

SHEET HT-9
SEQ. 117

ACAD Rel 15.05s (LMS Tech) User: NE
[SAN00132]N:\MECH\BLOWER_BLDG\HT-9.DWG
JUL 12, 2001 2:28:43 P.M. LTS: 1.00 PSLTS: 1 TWIST: 0.0
4 REFERENCE FILES: 50183, N:\BORDER, N:\ENV\HT-DET1 and N:\MECH\BLOWER_BLDG\HTBASE

Account=SAN00132 File: N:\RECORD\MECH\HT-9.DWG
Date: Feb 23, 2004 - 1:26pm User: jas ACAD release: R15.06s (LMS Tech)