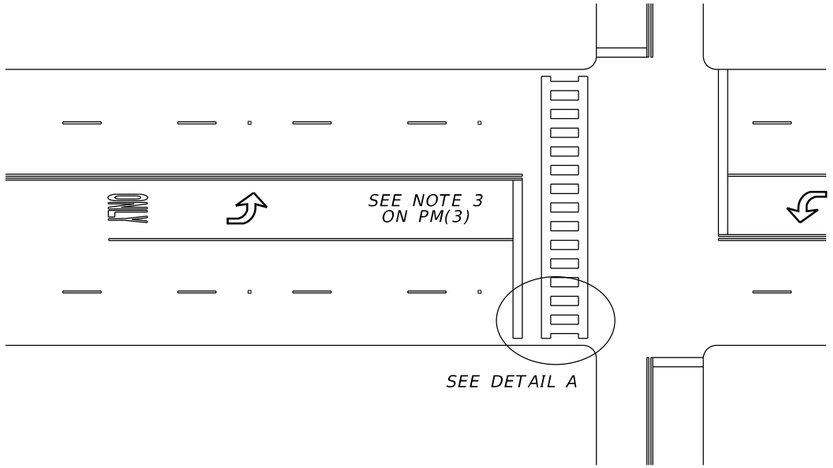

TYPICAL INTERSECTION
WITH PERPENDICULAR CROSSWALK

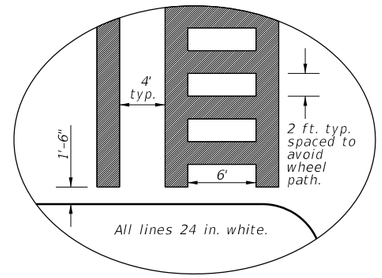

DETAIL A

The Engineer will approve final
placement of stop bar and crosswalk.

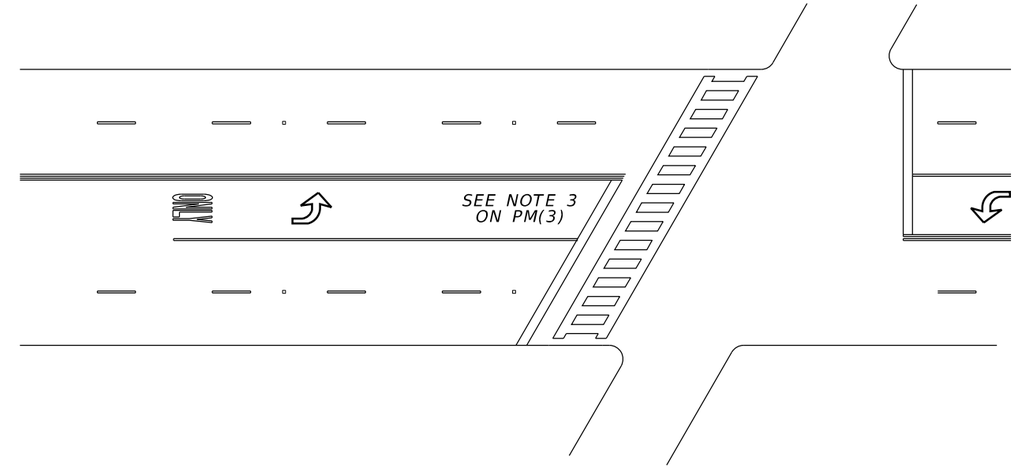

TYPICAL INTERSECTION
WITH SKEWED CROSSWALK

NOTE: WHERE IN CONFLICT, DETAILS ON THIS SHEET SHALL SUPERCEDE THE PAVEMENT MARKING STANDARD SHEETS.

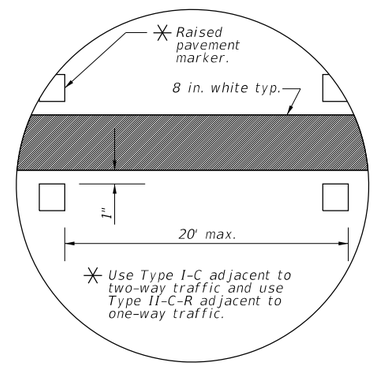

DETAIL C

PROJECT QUANTITIES OF WORDS AND ARROWS				
ONLY				
3	2	1	0	0
0	0	2	0	0

09/23/2016

STATE OF TEXAS
MICHAEL C. COYLE
95634
LICENSED
PROFESSIONAL ENGINEER

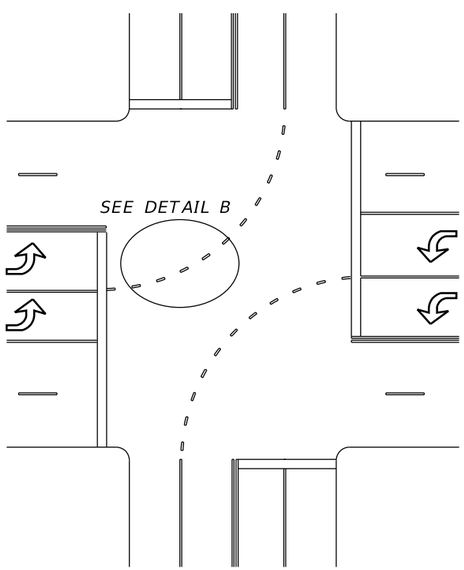

TYPICAL INTERSECTION
WITH "CAT TRACKS"

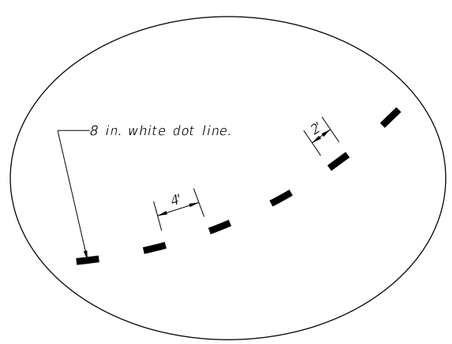

DETAIL B

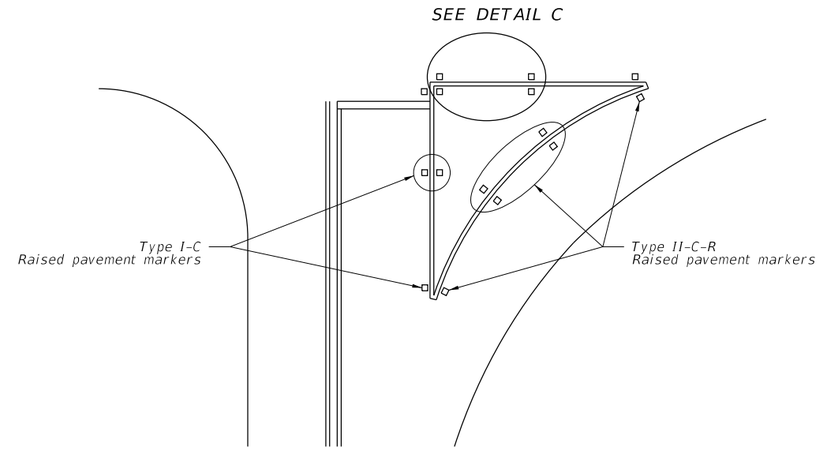

TYPICAL INTERSECTION
WITH UNCURBED
CHANNELIZING ISLAND

REV. NO.	DATE	DESCRIPTION	BY

LJA Engineering, Inc.
FRN-F-1386

THE CITY OF SAN ANGELO TEXAS

SOUTHLAND BOULEVARD

PAVEMENT MARKING DETAILS

SHEET 1 OF 1

SHEET NO. 55

11:09:09 AM 9/23/2016
T:\2357\160\\CADD\SHEETS\05-Markings\SB-MM01.dgn