TYPE 3 BARRICADES

1. Refer to the Compliant Work Zone Traffic Control Devices List (CWZTCD) for details of the Type 3 Barricades and a list of all materials used in the construction of Type 3 Barricades.
2. Type 3 Barricades shall be used at each end of construction projects closed to all traffic.
3. Barricades extending across a roadway should have stripes that slope downward in the direction toward which traffic must turn in detouring. When both right and left turns are provided, the chevron striping may slope downward in both directions from the center of the barricade. Where no turns are provided at a closed road striping should slope downward in both directions toward the center of roadway.
4. Striping of rails, for the right side of the roadway, should slope downward to the left. For the left side of the roadway, striping should slope downward to the right.
5. Identification markings may be shown only on the back of the barricade rails. The maximum height of letters and/or company logos used for identification shall be 1".
6. Barricades shall not be placed parallel to traffic unless an adequate clear zone is provided.
7. Warning lights shall NOT be installed on barricades.
8. Where barricades require the use of weights to keep from turning over, the use of sandbags with dry, cohesionless sand is recommended. The sandbags will be tied shut to keep the sand from spilling and to maintain a constant weight. Sand bags shall not be stacked in a manner that covers any portion of a barricade rails reflective sheeting. Rock, concrete, iron, steel or other solid objects will NOT be permitted. Sandbags should weigh a minimum of 35 lbs and a maximum of 50 lbs. Sandbags shall be made of a durable material that tears upon vehicular impact. Rubber (such as tire inner tubes) shall not be used for sandbags. Sandbags shall only be placed along or upon the base supports of the device and shall not be suspended above ground level or hung with rope, wire, chains or other fasteners.
9. Sheeting for barricades shall be retroreflective Type A conforming to Departmental Material Specification DMS-8300 unless otherwise noted.

Barricades shall NOT be used as a sign support.

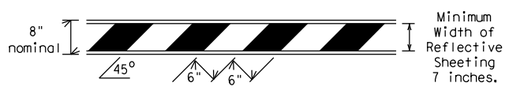

TYPICAL STRIPING DETAIL FOR BARRICADE RAIL

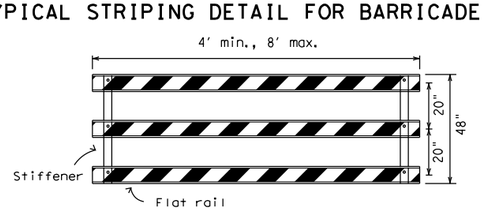

Stiffener may be inside or outside of support, but no more than 2 stiffeners shall be allowed on one barricade.

TYPICAL PANEL DETAIL FOR SKID OR POST TYPE BARRICADES

Each roadway of a divided highway shall be barricaded in the same manner.

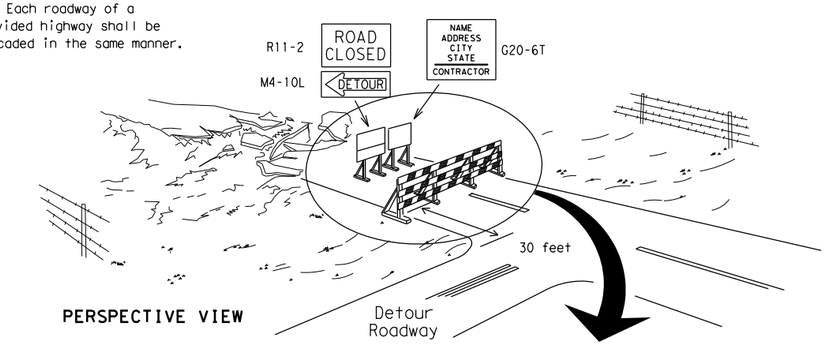

PERSPECTIVE VIEW

The three rails on Type 3 barricades shall be reflectorized orange and reflective white stripes on one side facing one-way traffic and both sides for two-way traffic.
Barricade striping should slant downward in the direction of detour.

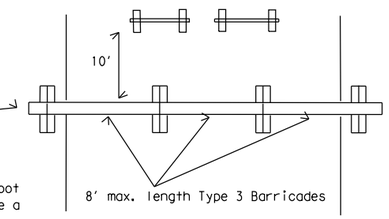

PLAN VIEW

1. Signs should be mounted on independent supports at a 7 foot mounting height in center of roadway. The signs should be a minimum of 10 feet behind Type 3 Barricades.
2. Advance signing shall be as specified elsewhere in the plans.

TYPE 3 BARRICADE (POST AND SKID) TYPICAL APPLICATION

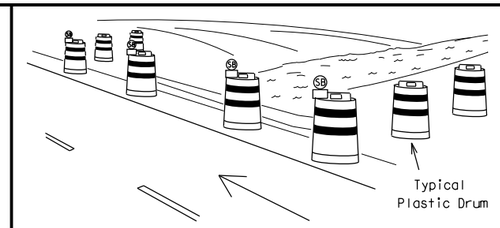

PERSPECTIVE VIEW

1. Where positive redirectional capability is provided, drums may be omitted.
2. Plastic construction fencing may be used with drums for safety as required in the plans.
3. Vertical Panels on flexible support may be substituted for drums when the shoulder width is less than 4 feet.
4. When the shoulder width is greater than 12 feet, steady-burn lights may be omitted if drums are used.
5. Drums must extend the length of the culvert widening.

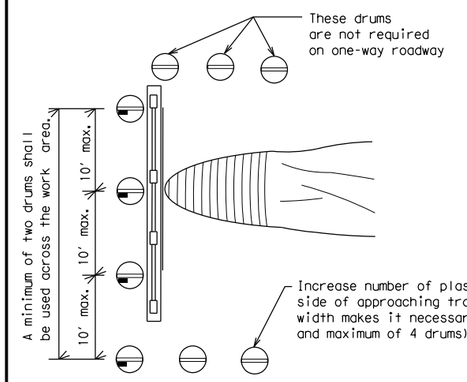

PLAN VIEW

LEGEND	
	Plastic drum
	Plastic drum with steady burn light or yellow warning reflector
SB	Steady burn warning light or yellow warning reflector

CULVERT WIDENING OR OTHER ISOLATED WORK WITHIN THE PROJECT LIMITS

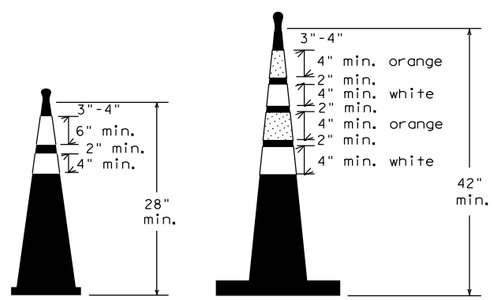

Two-Piece cones

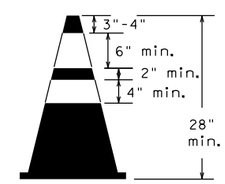

One-Piece cones

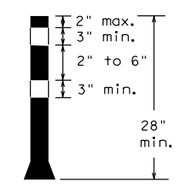

Tubular Marker

28" Cones shall have a minimum weight of 9 1/2 lbs.

42" 2-piece cones shall have a minimum weight of 30 lbs. including base.

1. Traffic cones and tubular markers shall be predominantly orange, and meet the height and weight requirements shown above.
2. One-piece cones have the body and base of the cone molded in one consolidated unit. Two-piece cones have a cone shaped body and a separate rubber base, or ballast, that is added to keep the device upright and in place.
3. Two-piece cones may have a handle or loop extending up to 8" above the minimum height shown, in order to aid in retrieving the device.
4. Cones or tubular markers used at night shall have white or white and orange reflective bands as shown above. The reflective bands shall have a smooth, sealed outer surface and meet the requirements of Departmental Material Specification DMS-8300 Type A.
5. 28" cones and tubular markers are generally suitable for short duration and short-term stationary work as defined on BC(4). These should not be used for intermediate-term or long-term stationary work unless personnel is on-site to maintain them in their proper upright position.
6. 42" two-piece cones, vertical panels or drums are suitable for all work zone durations.
7. Cones or tubular markers used on each project should be of the same size and shape.

THIS DEVICE SHALL NOT BE USED ON PROJECTS LET AFTER MARCH 2014.

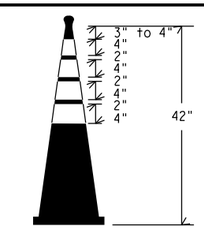

EDGELINE CHANNELIZER

1. This device is intended only for use in place of a vertical panel to channelize traffic by indicating the edge of the travel lane. It is not intended to be used in transitions or tapers.
2. This device shall not be used to separate lanes of traffic (opposing or otherwise) or warn of objects.
3. This device is based on a 42 inch, two-piece cone with an alternate striping pattern: four 4 inch retroreflective bands, with an approximate 2 inch gap between bands. The color of the band should correspond to the color of the edgeline (yellow for left edgeline, white for right edgeline) for which the device is substituted or for which it supplements. The reflectorized bands shall be retroreflective Type A conforming to Departmental Material Specification DMS-8300, unless otherwise noted.
4. The base must weigh a minimum of 30 lbs.

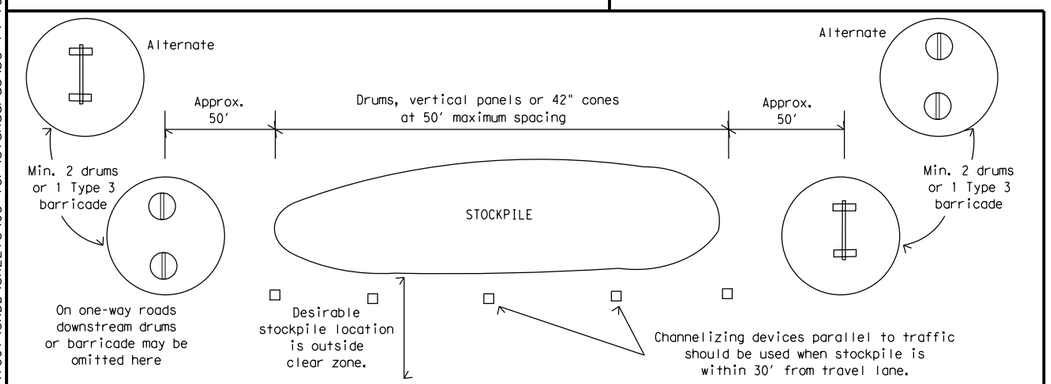

TRAFFIC CONTROL FOR MATERIAL STOCKPILES

SHEET 10 OF 12

Texas Department of Transportation — Traffic Operations Division Standard

BARRICADE AND CONSTRUCTION CHANNELIZING DEVICES

BC(10)-14

FILE: bc-14.dgn	DN: TxDOT	CK: TxDOT	DW: TxDOT	CK: TxDOT
© TxDOT November 2002	CONT	SECT	JOB	HIGHWAY
REVISIONS 9-07 8-14 7-13				SOUTHLAND
	DIST	COUNTY		SHEET NO.
		TOM GREEN		19

DISCLAIMER: The use of this standard is governed by the "Texas Engineering Practice Act". No warranty of any kind is made by TxDOT for any purpose whatsoever. TxDOT assumes no responsibility for the conversion of this standard to other formats or for incorrect results or damages resulting from its use.

DATE: 9/23/2016 11:07:46 AM
FILE: T:\2357\1601\CADD\SHEETS\03-TCP\Standards\bc-14-10.dgn