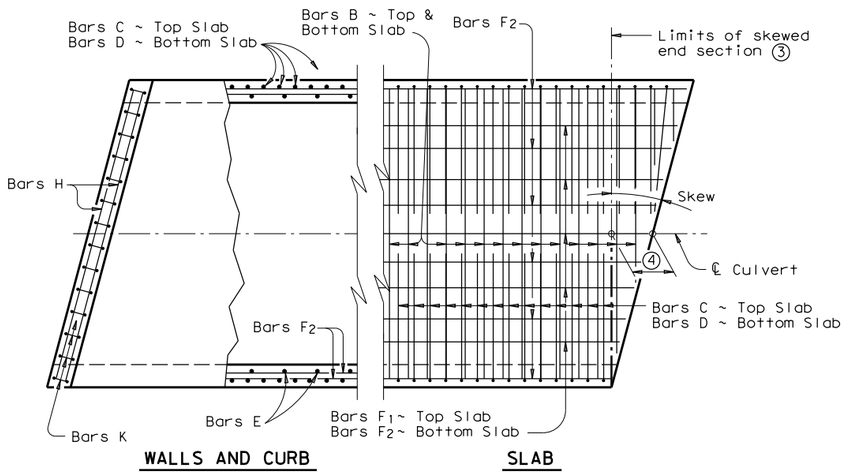

PLAN OF SKEWED ENDS ~ FROM 0° TO 15° ⑦

② When the spacing between Bars B becomes less than half of the normal spacing, bars shall be cut to avoid fouling

③ The length of Bars B and E will vary in the skewed end sections

④ [One half of overall width] x [Tan of the skew angle]

⑤ Bars F_1 and F_2 shall be continuous through the angle section. They shall be bent to remain parallel to the walls of the Box Culvert.

⑥ When necessary to avoid fouling in acute corners, the slab extension leg of Bars C and Bars D may be shortened to a minimum of 1'-6" for skews of 30° and 45°.

⑦ For skews of 15° or less, the contractor has the option of placing Bars B, C and D parallel to the skewed end while maintaining spacing along centerline box. Lengths of Bars B shown on the standards shall be increased to accommodate the skew.

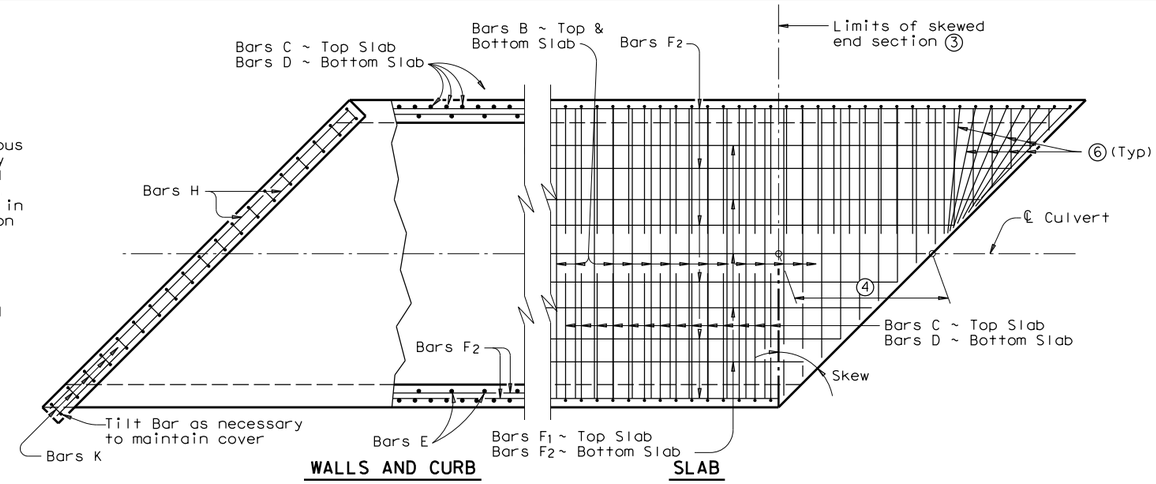

PLAN OF SKEWED ENDS ~ OVER 30° TO 45°

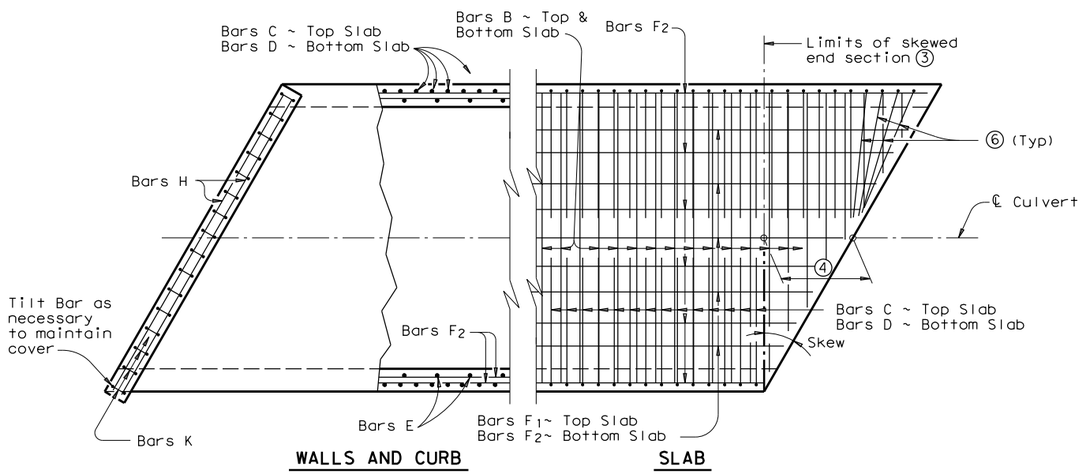

PLAN OF SKEWED ENDS ~ OVER 15° TO 30°

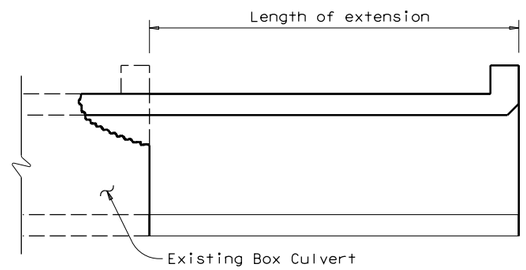

LENGTHENING DETAIL ①

① For box culverts with less than 2'-0" of fill, the top slab shall be broken back to provide a minimum 1'-10" lap of the existing longitudinal bars with the longitudinal bars in the extension. If the depth of fill is 2'-0" or greater, the top slab shall be broken back to provide a 1'-0" minimum embedment of existing longitudinal reinforcing into the extension. Alternatively, if the fill height is greater than 2'-0", the existing curb may be left in place and 2'-0" long #6 bars shall be drilled and grouted 1'-0" into the existing top slab at 1'-6" center to center spacing. Wings and apron shall be broken back as necessary to install the extension. Exposed wingwall and apron reinforcing may be removed or cleaned and included in the extension. When lengthening existing box culverts with dimensions different than current standard dimensions, horizontal and vertical transitions shall be formed as directed by the Engineer. Bottom slabs shall match to maintain an uninterrupted flow line. Existing and new reinforcing shall be field bent into transition maintaining specified cover requirements.

GENERAL NOTES:

Designed according to AASHTO LRFD Specifications.

All reinforcing steel shall be Grade 60.

All concrete shall be Class "C" with these exceptions: use Class "S" for top slabs of culverts with overlay, with 1-to-2 course surface treatment, or with the top slab as the final riding surface.

Class "C" concrete shall have a minimum compressive strength of 3,600 psi. Class "S" concrete shall have a minimum compressive strength of 4,000 psi.

The use of permanent forms is not allowed.

Refer to Single Box Culverts Cast-in-Place standard for details of straight sections of culvert. For skewed sections and angle sections refer to Single Box Culverts Cast-in-Place standard for slab and wall dimensions, bar sizes, maximum bar spacing, and any other details not shown. For Skewed ends with curbs, adjust length of Bars H, number of Bars K, curb concrete volume and reinforcing steel weight by dividing the values shown on the culvert standards by the cosine of the skew angle.

Laps for Bars H, when required, shall be 1'-9" for uncoated bars and 2'-7" for epoxy coated.

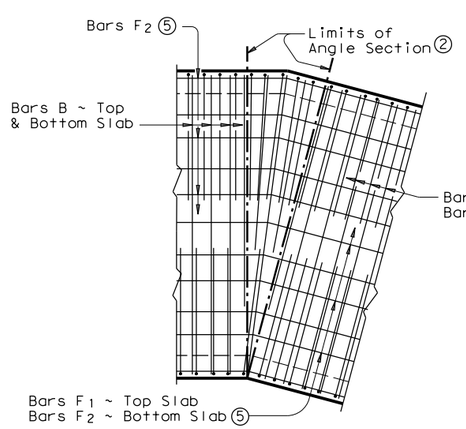

PLAN OF ANGLE SECTION ~ FROM 0° TO 15°

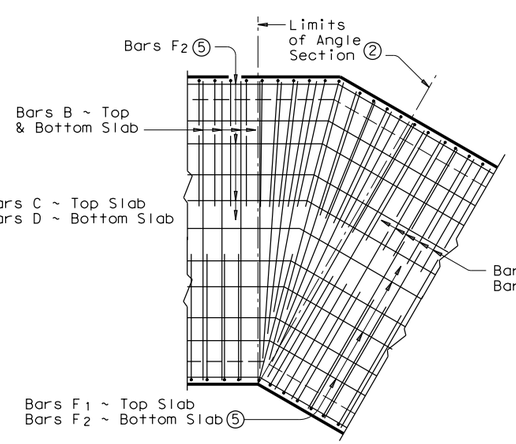

PLAN OF ANGLE SECTION ~ OVER 15° TO 30°

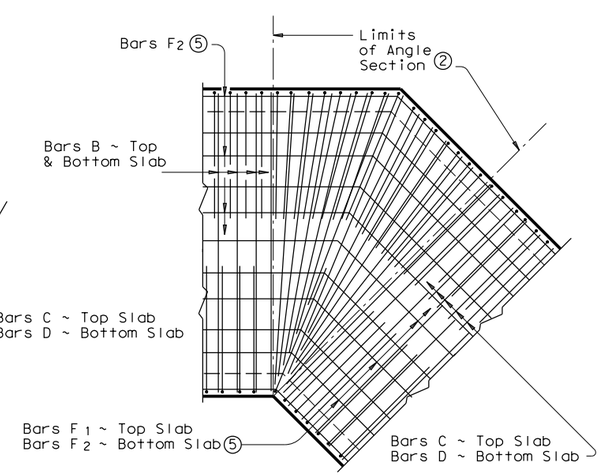

PLAN OF ANGLE SECTION ~ OVER 30° TO 45°

HL93 LOADING

Texas Department of Transportation — Bridge Division Standard

SINGLE BOX CULVERTS CAST-IN-PLACE MISCELLANEOUS DETAILS

SCC-MD

FILE: sccmdste.dgn	DN: GAF	CK: LMW	DW: BWH/TxDOT	CK: GAF
©TxDOT February 2010	CONT	SECT	JOB	HIGHWAY
REVISIONS				SOUTHLAND
	DIST	COUNTY		SHEET NO.
		TOM GREEN		43

DISCLAIMER:
The use of this standard is governed by the "Texas Engineering Practice Act". No warranty of any kind is made by TxDOT for any purpose whatsoever. TxDOT assumes no responsibility for the conversion of this standard to other formats or for incorrect results or damages resulting from its use.

DATE: 9/23/2016 11:08:37 AM
FILE: T:\2357\1601\CADD\SHEETS\06-Drainage\Standards\sccmdste.dgn