DISCLAIMER: The use of this standard is governed by the "Texas Engineering Practice Act". No warranty of any kind is made by TxDOT for any purpose whatsoever. TxDOT assumes no responsibility for the conversion of this standard to other formats or for incorrect results or damages resulting from its use.

DEFINITION OF TREATMENT ZONES FOR VARIOUS EDGE CONDITIONS

Edge Height (D) in Inches versus Lateral Clearance (Y) in Feet

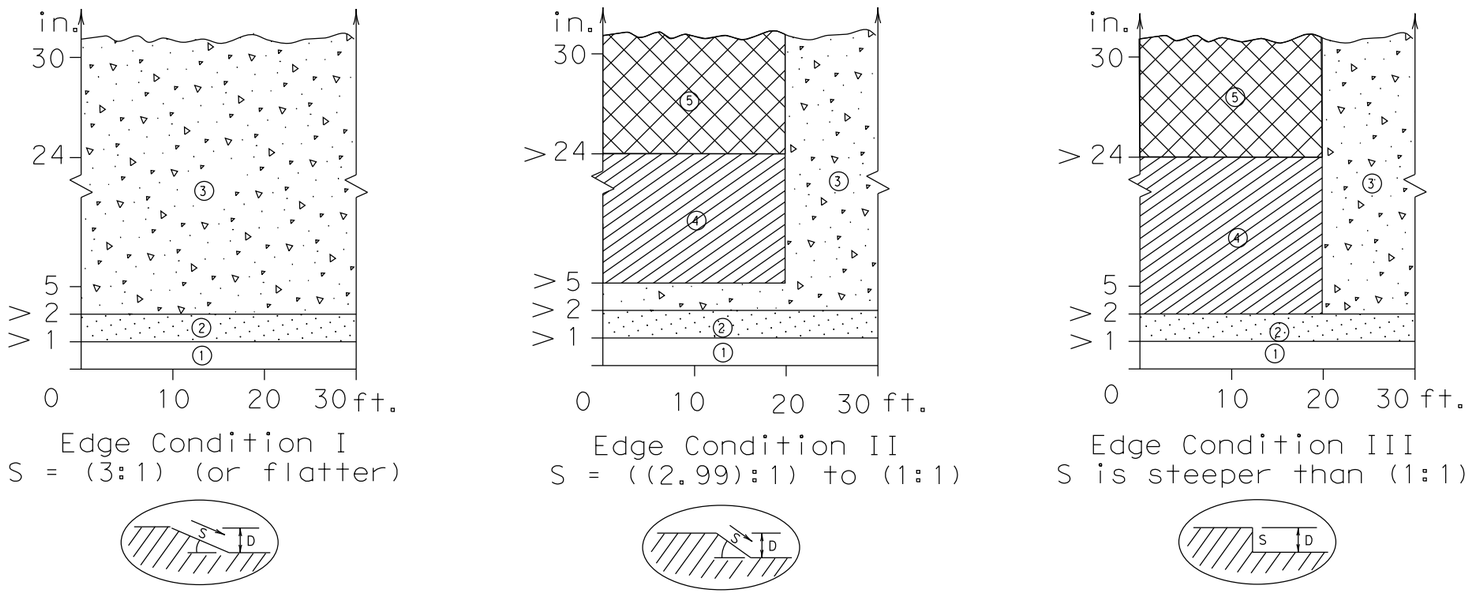

Edge Condition I
S = (3:1) (or flatter)

Edge Condition II
S = ((2.99):1) to (1:1)

Edge Condition III
S is steeper than (1:1)

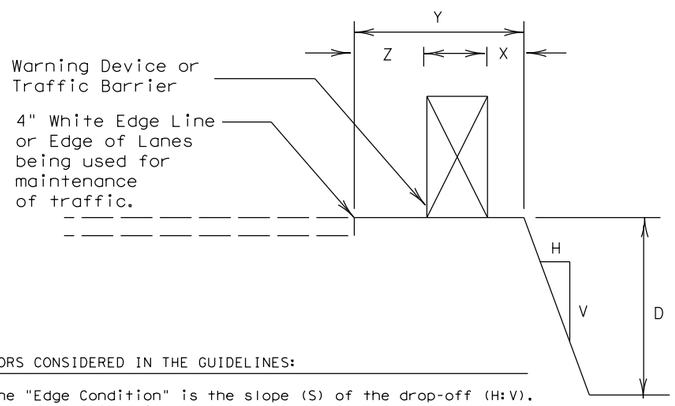

FACTORS CONSIDERED IN THE GUIDELINES:

1. The "Edge Condition" is the slope (S) of the drop-off (H:V). The "Edge Height is the depth of the drop-off "D".

2. Distance "X" is to be the maximum practical under job conditions. Two feet minimum for high speed conditions. Distance "Y" is the lateral clearance from edge of travel lane to edge of dropoff. Distance "Z" does not have a minimum.

3. In addition to the factors considered in the guidelines, each construction zone drop-off situation should be analyzed individually, taking into account other variables, such as: traffic mix, posted speed in the construction zone, horizontal curvature, and the practicality of the treatment options.

4. The conditions for indicating the use of positive or protective barriers are given by Zone-5 and Figure-1. Traffic barriers are primarily applicable for high speed conditions. Urban areas with speeds of 30 mph or less may have a lesser need for signing, delineation, and barriers. Right-angled edges, however, with "D" greater than 2 inches and located within a lateral offset of 6 feet, may indicate a higher level of treatment.

5. If the distance "Y" must be less than 3 feet, the use of a positive barrier may not be feasible. In such a case, consider either: 1) narrowing the lanes to a desired 11 to 12 feet or 10 foot minimum (see CW20-8 sign), or 2) provide an edge slope such as Edge Condition I.

Zone	Treatment Types Guidelines:
1	No treatment.
2	CW 8-11 "Uneven Lanes" signs.
3	CW 8-9a "Shoulder Drop-Off" or CW 8-11 signs plus vertical panels.
4	CW 8-9a or CW 8-11, signs plus drums. Where restricted space precludes the use of drums, use vertical panels. An edge fill may be provided to change the edge slope to that of the preferable Edge Condition I.
5	Check indications (Figure-1) for positive barrier. Where positive barrier is not indicated, the treatment shown above for Zone- 4 may be used after consideration of other applicable factors.

Edge Condition Notes:

1. Edge Condition I: Most vehicles are able to traverse an edge condition with a slope rate of (3 to 1) or flatter. The slope must be constructed with a compacted material capable of supporting vehicles.

2. Edge Condition II: Most vehicles are able to traverse an edge condition with a slope between (2.99 to 1) and (1to 1) so long as "D" does not exceed 5 inches. Under-carriage drag on most automobiles will occur when "D" exceeds 6 inches. As "D" exeeds 24 inches, the possibility for rollover is greater in most vehicles.

3. Edge Condition III: When slopes are greater than (1 to 1) and where "D" is greater than 2 inches, a more difficult control factor may exist for some vehicles, if not properly treated. For example, where "D" is greater than 2 inches and up to 24 inches different types of vehicles may experience different steering control at different edge heights. Automobiles might experience more steering control differential when "D" is greater than 2 inches and up to 5 inches. Trucks, particularily those with high loads, have more steering control differential when "D" is greater than 5 inches and up to 24 inches. When "D" exceeds 24 inches, the possibility of rollover is greater for most vehicles.

4. Milling or overlay operations that result in Edge Condition III should not be in place without appropriate warning treatments, and these conditions should not be left in place for extended periods of time.

FIGURE-1: CONDITIONS INDICATING USE OF POSITIVE BARRIER FOR ZONE 5 (▨)

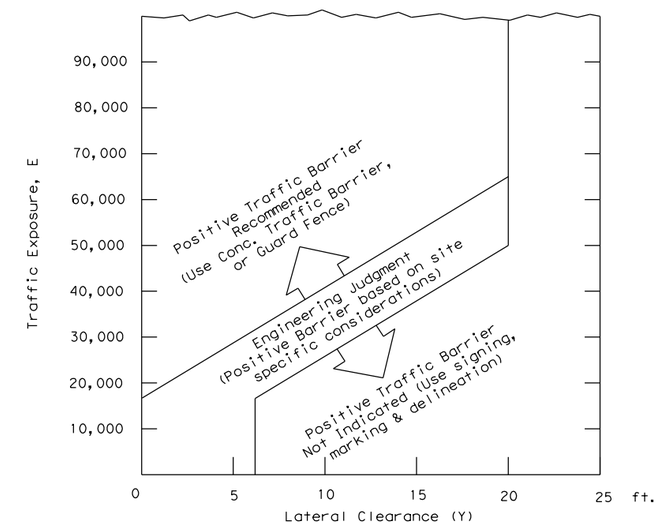

1 E = ADT x T
Where ADT is that portion of the average daily traffic volume traveling within 20 feet (generally two adjacent lanes) of the edge dropoff condition; and, T is the duration time in years of the dropoff condition.

2 Figure-1 provides a practical approach to the use of positive barriers for the protection of vehicles from pavement drop-offs. Other factors, such as the presence of heavy machinery, construction workers, or the mix and volume of traffic may make the use of positive barriers appropriate, even when the edge condition alone may not justify the use of a barrier.

3 An approved end treatment should be provided for any positive barrier end located within a lateral offset of 20 feet from the edge of the travel lane.

These guidelines apply to temporary traffic control areas or work zones where continuous pavement edges or drop-offs exists parallel and adjacent to a lane used by traffic. The edge conditions may be present between shoulders and travel lanes, between adjacent or opposing travel lanes, or at intermediate points across the width of the paved surface. Due to the variability in construction operations, tolerances in the variables may be allowed by the engineer. These guidelines do not apply to short term operations. These guidelines do not constitute a rigid standard or policy; rather, they are guidance to be used in conjunction with engineering judgement. These guidelines may be updated on the Design Division's on-line manuals.

09/23/2016

STATE OF TEXAS
MICHAEL C. COYLE
95634
LICENSED PROFESSIONAL ENGINEER

DATE

Texas Department of Transportation
Traffic Operations Division

TREATMENT FOR VARIOUS EDGE CONDITIONS

© TxDOT August 2000

DN: TXDOT	CK: TXDOT	DW: TXDOT	CK: TXDOT

REVISIONS
03-01
08-01 correct typos

CONT	SECT	JOB	HIGHWAY
			SOUTHLAND
DIST	COUNTY		SHEET NO.
	TOM GREEN		25

DATE: 9/23/2016 11:07:56 AM
FILE: T:\2357\1601\CADD\SHEETS\03-TCP\Standards\edgecon.dgn