DISCLAIMER:
The use of this standard is governed by the "Texas Engineering Practice Act". No warranty of any kind is made by TxDOT for any purpose whatsoever. TxDOT assumes no responsibility for the conversion of this standard to other formats or for incorrect results or damages resulting from its use.

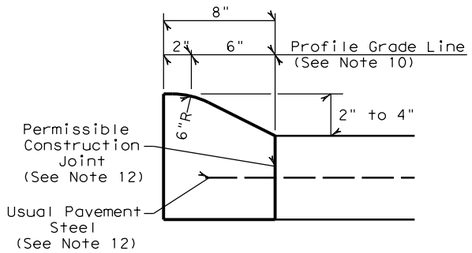

TYPE I CURB (MONOLITHIC)
2" - 4" HEIGHT

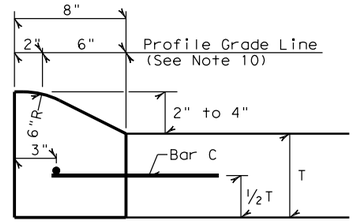

TYPE I CURB
2" - 4" HEIGHT

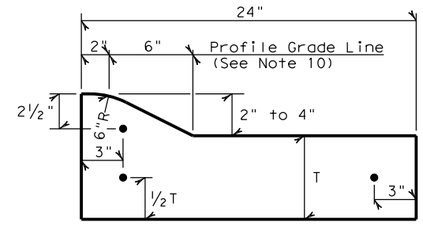

TYPE I CURB AND GUTTER
2" - 4" HEIGHT

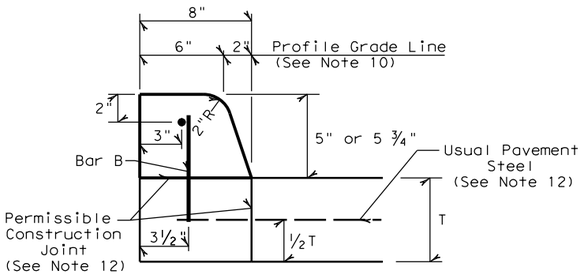

TYPE II CURB (MONOLITHIC)
5" - 5 ¾" HEIGHT

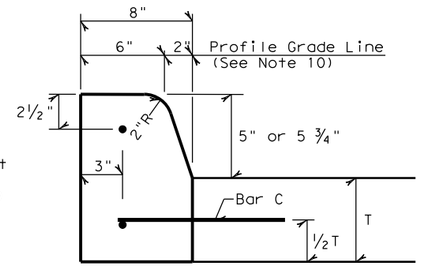

TYPE II CURB
5" - 5 ¾" HEIGHT

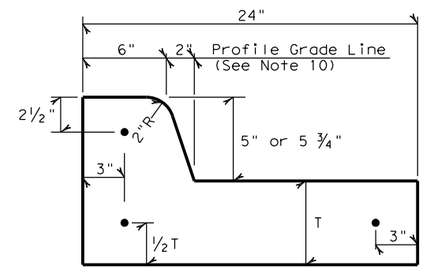

TYPE II CURB AND GUTTER
5" - 5 ¾" HEIGHT

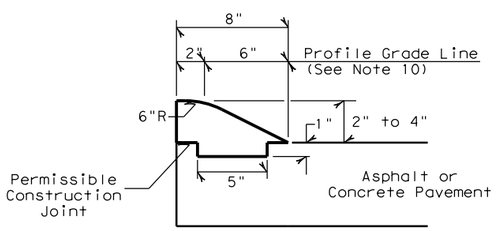

TYPE III CURB (KEYED)
2" - 4" HEIGHT

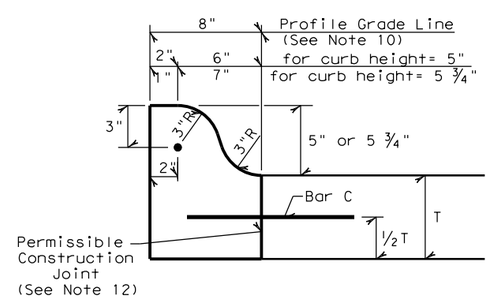

TYPE IIa CURB
5" - 5 ¾" HEIGHT

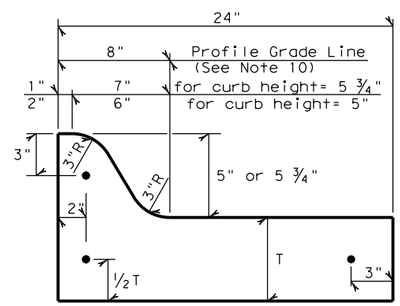

TYPE IIa CURB AND GUTTER
5" - 5 ¾" HEIGHT

TYPE IV CURB (KEYED)
5" - 5 ¾" HEIGHT

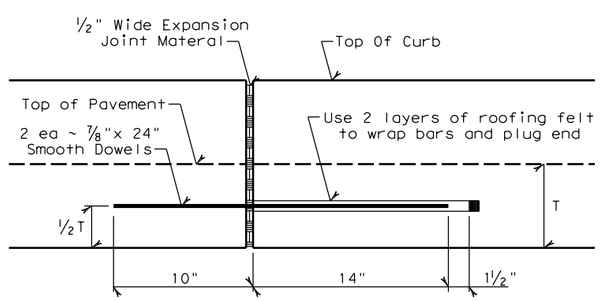

EXPANSION JOINT DETAIL

Curb Transition Note:
Field conditions may require a longer or shorter transition, and shall be shown elsewhere in the plans, or as directed by the Engineer.

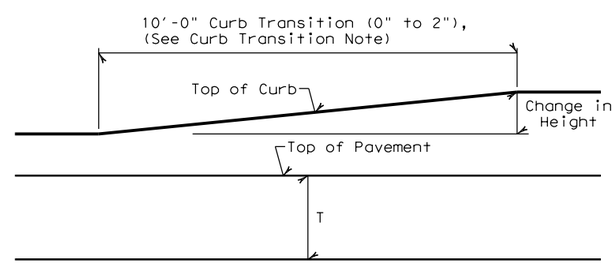

CURB TRANSITION
Note: To be paid for as Highest Curb

General Notes

1. All materials and construction shall be in accordance with Item 529, "Concrete Curb, Gutter, and Combined Curb and Gutter."
2. Concrete shall be Class A.
3. When reinforcing bars are used, they shall be No. 4 unless otherwise shown. The use of synthetic fiber in lieu of steel reinforcing is acceptable, provided the fiber producer is on the Department Producer List (MPL), maintained by TxDOT, Construction Division.
4. Round exposed sharp edges with a rounding tool, to a minimum radius of ¼ inch.
5. All existing curbs and driveways to be removed shall be sawed or removed at existing joints.
6. Where concrete curb is placed on existing concrete pavement, the pavement shall be drilled and the reinforcing bars grouted in place.
7. Expansion and contraction joints shall be constructed to match pavement joints in all curbs and curb and gutter adjacent to jointed concrete pavement. Where placement of curb or curb and gutter is not adjacent to concrete pavement, expansion joints shall be provided at structures, curb returns at streets, and at locations directed by The Engineer.
8. Vertical and horizontal dowel bars and transverse reinforcing bars shall be placed at four feet C~C.
9. Dimension 'T' shown is the thickness of concrete pavement. When curb is installed adjacent to flexible pavement dimension 'T' is 8" maximum.
10. Usual profile grade line. Refer to typical sections and plan-profile sheets for exact locations.
11. One-half inch expansion joint material shall be provided where curb or curb and gutter is adjacent to sidewalk or riprap.
12. When vertical permissible construction joints are used, resulting in a longitudinal construction joint in the pavement, the longitudinal pavement steel shall be placed in accordance with pavement details shown elsewhere in the plans for longitudinal construction joints. Reinforcing steel for curb section shall then conform to that required for concrete curb.

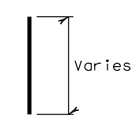

BAR B

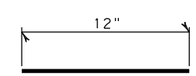

BAR C

Texas Department of Transportation

Design Division Standard

CONCRETE CURB AND CURB AND GUTTER

CCCG-12

FILE: cccg12.dgn	DN: TxDOT	CK: AM	DW: VP	CK:
© TxDOT: 1995	CONT	SECT	JOB	HIGHWAY
REVISIONS UPDATED 2012 - VP				SOUTHLAND
	DIST	COUNTY		SHEET NO.
		TOM GREEN		34

DATE: 9/23/2016 11:08:20 AM
FILE: T:\2357\1601\CADD\SHEETS\04-Roadway\Standards\cccg12.dgn