DISCLAIMER:
The use of this standard is governed by the "Texas Engineering Practice Act". No warranty of any kind is made by TxDOT for any purpose whatsoever. TxDOT assumes no responsibility for the conversion of this standard to other formats or for incorrect results or damages resulting from its use.

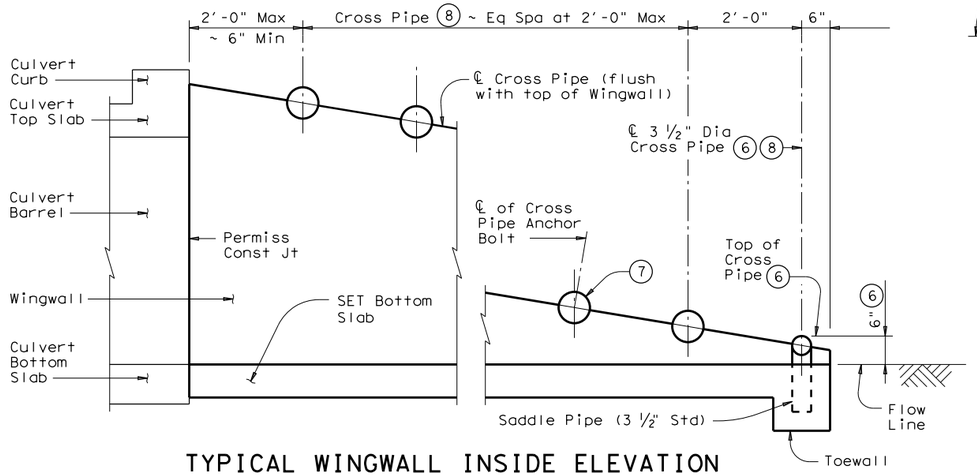

TYPICAL WINGWALL INSIDE ELEVATION

(Showing installation of Cross Pipes)

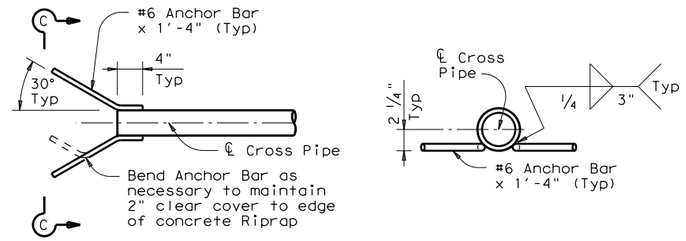

PART PLAN

SECTION C-C

OPTIONAL ANCHOR BAR DETAILS

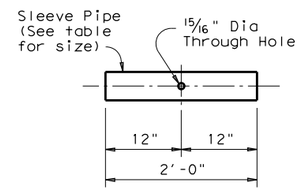

SLEEVE PIPE DETAILS (9)

REQUIRED PIPE SIZES (8)		
Culvert Span Sizes	Cross Pipe Size	Sleeve Pipe Size (9)
First Pipe	3 ½" STD	2 ½" STD
30" to 42"	4" STD	3" STD
48" to 72"	5" STD	4" STD
78" to 120"	6" STD	5" STD

STANDARD PIPE SIZES		
Pipe Size	Pipe O.D.	Pipe I.D.
2 ½" STD	2.875"	2.469"
3" STD	3.500"	3.068"
3 ½" STD	4.000"	3.548"
4" STD	4.500"	4.026"
5" STD	5.563"	5.047"
6" STD	6.625"	6.065"

(6) The proper installation of the first Cross Pipe is critical for vehicle safety. The top of the first Cross Pipe must be placed at no more than 6" above the flow line.

(7) The third Cross Pipe from the bottom of the Culvert shall always be installed using a bolted connection. Care shall be taken to ensure that concrete does not flow into this Cross Pipe so as to permit disassembly of the bolted connection to allow cleanout access.

(8) Cross Pipes and Sleeve Pipes (if required) shall be as shown in the REQUIRED PIPE SIZES table. Saddle Pipes for the 3 ½" first Cross Pipe shall also be 3 ½".

(9) At Contractor's option, the Cross Pipe may be continuous across the Inside Wingwalls. If such option is selected, the Sleeve Pipe shall be omitted and a 15/16" diameter through hole made in the Cross Pipe to accept the anchor bolt at the centerline of each Interior Wingwall.

(10) Riprap will be required when using the optional Anchor Bar details and shall be included in the Price Bid for Safety End Treatment. Such Riprap shall be concrete Riprap in accordance with Item 432, "Riprap".

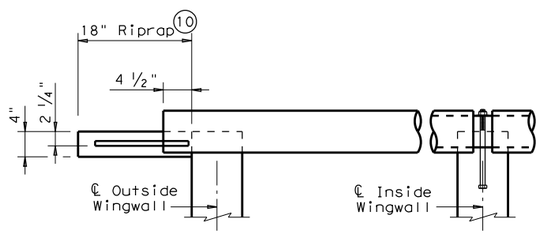

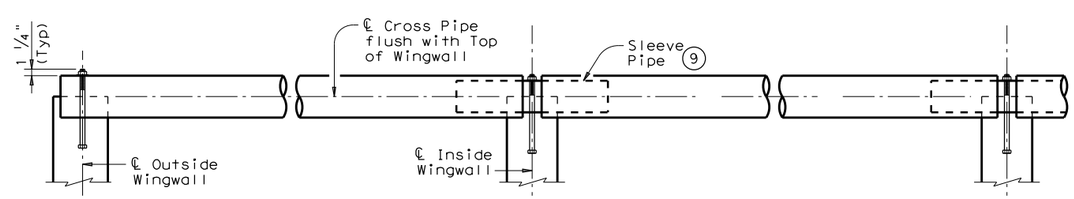

SECTION THROUGH INSTALLATION OF TYPICAL FULL CROSS PIPE

(Anchor details and dimensions are similar to those shown below in SECTION THROUGH INSTALLATION OF 3 ½" FIRST CROSS PIPE detail.)

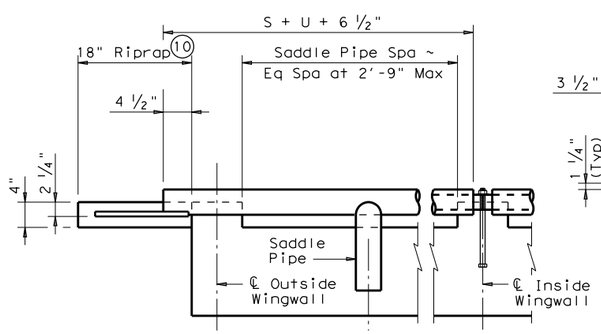

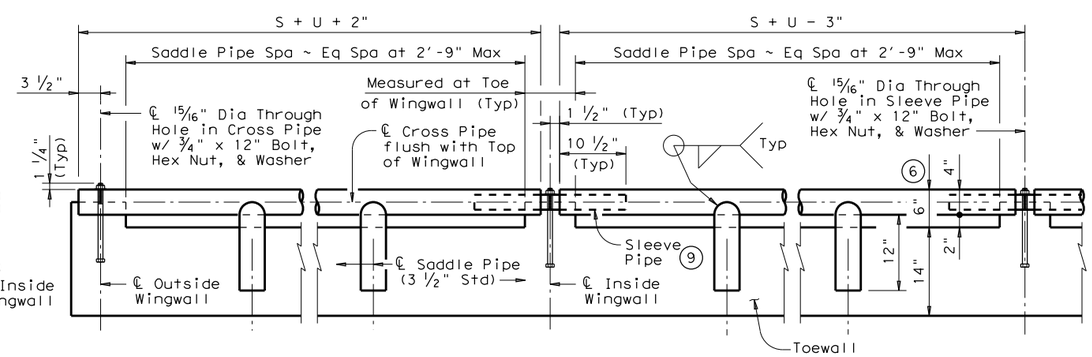

SECTION THROUGH INSTALLATION OF 3 ½" FIRST CROSS PIPE

OUTSIDE CULVERT BARREL WITH OPTIONAL ANCHOR BARS & RIPRAP

OUTSIDE CULVERT BARREL WITH BOLTED ANCHOR

INSIDE CULVERT BARREL

CROSS PIPE INSTALLATION DETAILS

SHEET 2 OF 2

Texas Department of Transportation — Bridge Division Standard

SAFETY END TREATMENT

FOR BOX CULVERTS
(MAXIMUM Hw = 7'-0")
TYPE I ~ PARALLEL DRAINAGE

SETB-PD

FILE: setbpdse.dgn	DN: GAF	CK: CAT	DW: JRP	CK: GAF
©TxDOT February 2010	CONT	SECT	JOB	HIGHWAY
REVISIONS				SOUTHLAND
	DIST	COUNTY		SHEET NO.
		TOM GREEN		45

DATE: 9/23/2016 11:08:40 AM
FILE: T:\2357\1601\CADD\SHEETS\06-Drainage\Standards\setbpdse-2.dgn