DISCLAIMER:
The use of this standard is governed by the "Texas Engineering Practice Act". No warranty of any kind is made by TxDOT for any purpose whatsoever. TxDOT assumes no responsibility for the conversion of this standard to other formats or for incorrect results or damages resulting from its use.

TYPE 1

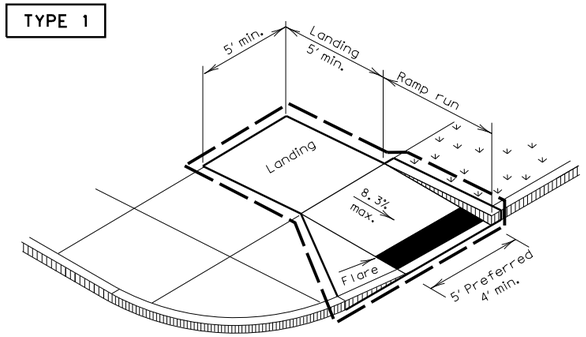

PERPENDICULAR CURB RAMP

TYPE 2

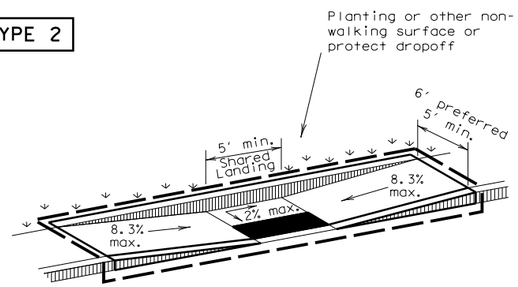

PARALLEL CURB RAMP
(Use only where water will not pond in the landing.)

TYPE 5

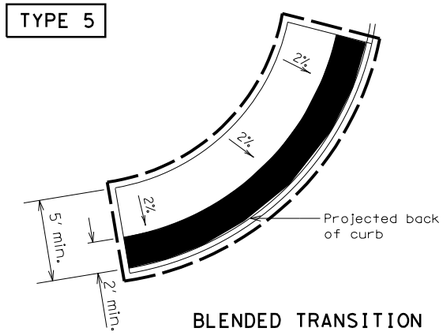

BLENDED TRANSITION

TYPE 20

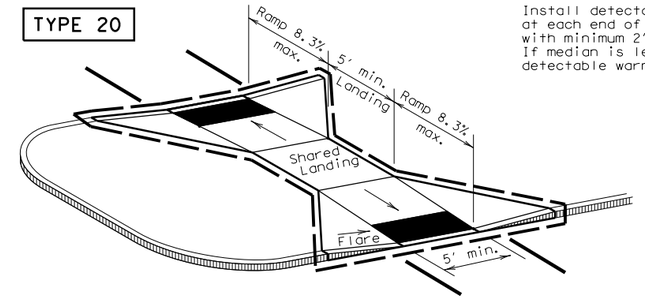

Install detectable warning surface at each end of cut-through ramp with minimum 2' smooth surface between. If median is less than 6' wide, eliminate detectable warning surfaces.

TYPE 21

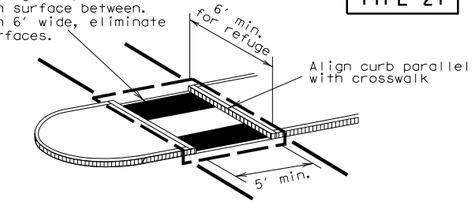

Curb details are shown elsewhere in the plans.

CURB RAMPS AT MEDIAN ISLANDS

TYPE 7

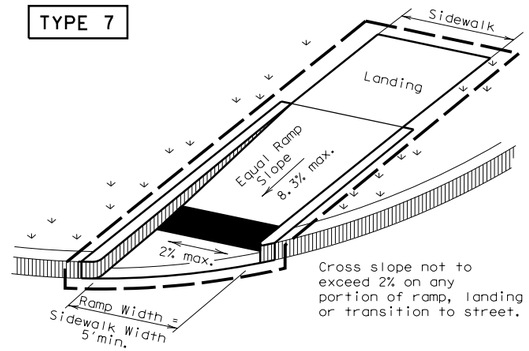

Cross slope not to exceed 2% on any portion of ramp, landing or transition to street.

(Sidewalk set back from curb)

TYPE 10

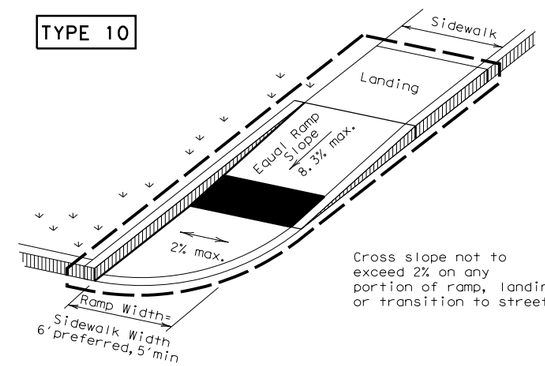

Cross slope not to exceed 2% on any portion of ramp, landing or transition to street.

(Sidewalk adjacent to curb)

DIRECTIONAL RAMPS WITHIN RADIUS

TYPE 22

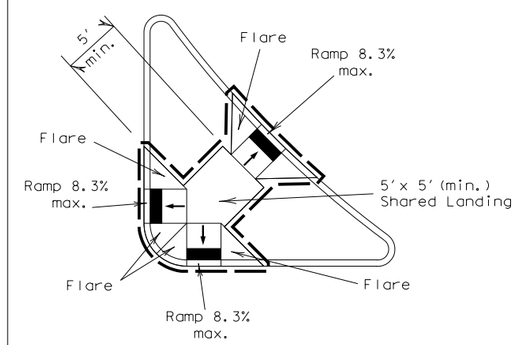

COMBINATION ISLAND RAMPS

TYPE 3

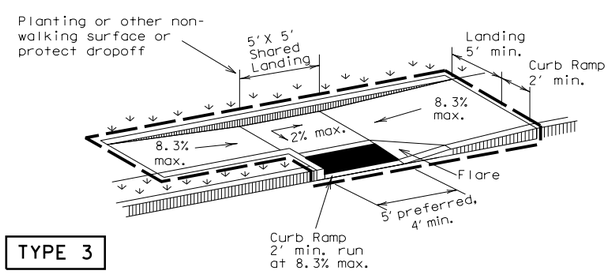

TYPE 6

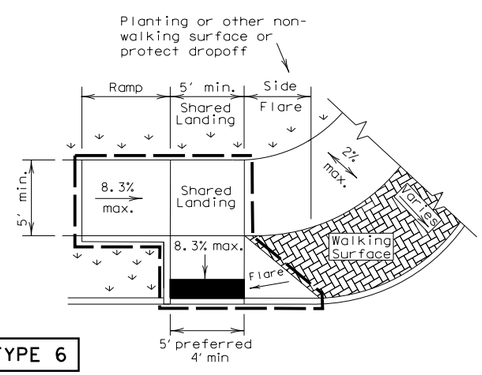

COMBINATION CURB RAMPS

TYPE 11

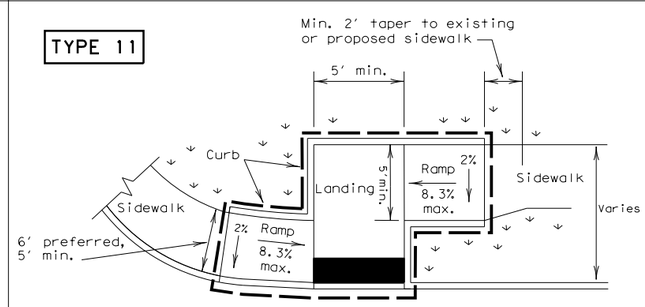

OFFSET PARALLEL CURB RAMP

NOTES / LEGEND:

See General Notes on sheet 2 of 4 for more information.

Denotes planting or non-walking surface not part of pedestrian circulation path.

Ramp Limits of Payment

Detectable Warning Surface

SHEET 1 OF 4

Texas Department of Transportation — Design Division Standard

PEDESTRIAN FACILITIES CURB RAMPS

PED-12A

FILE: ped12a.dgn	DN: TxDOT	CK: RM	DW: TxDOT	CK: VP	
©TxDOT March 2002	CONT	SECT	JOB	HIGHWAY	
REVISIONS				SOUTHLAND	
VP June 13, 2012	DIST	COUNTY		SHEET NO.	
		TOM GREEN		35	

DATE: 9/23/2016 11:08:21 AM
FILE: T:\235T\1601\CADD\SHEETS\04-Roadway\Standards\ped12a-1.dgn