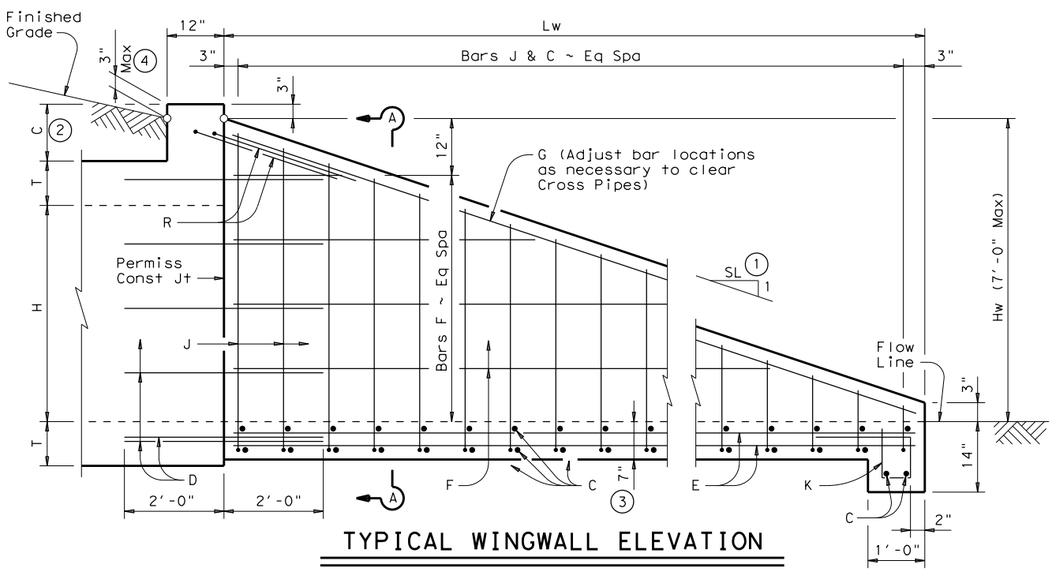

TYPICAL WINGWALL ELEVATION

(Cross Pipes not shown for clarity)

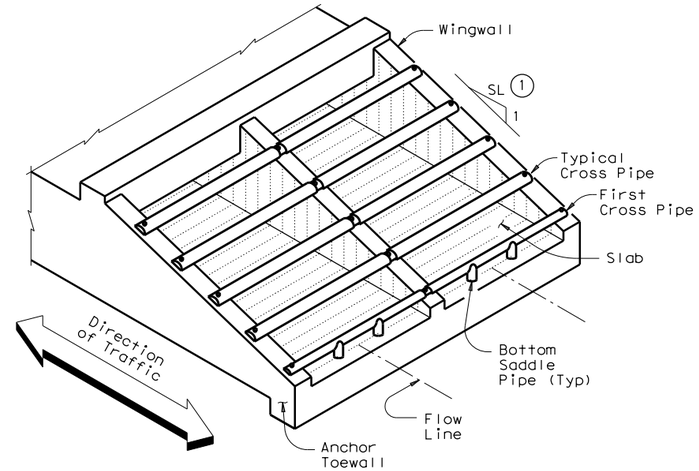

ISOMETRIC VIEW OF TYPICAL INSTALLATION

(Showing Bolted Anchor Option)

Formulas: (All values are in Feet)

$Hw = H + T + C - 0.250'$

$Lw = (Hw - 0.250')\ (SL)$

For Cast-in-place culverts:

$Atw = (N)\ (S) + (N+1)\ (U)$

For Precast culverts:

$Atw = (N)\ (2U+S) + (N-1)\ (0.500')$

Total Wingwall Area (S.F.)
$= (0.5)\ (Hw + 0.250')\ (Lw)\ (N+1)$

Total Concrete Volume (C.Y.)
$= [(\text{Wingwall Area})\ (0.583') + (Lw)\ (Atw)\ (0.583') + (Atw)\ (1.000')\ (1.167' - 0.583')] \div (27)$

Total Reinforcing (Lbs)
$= (1.55)\ (Lw)\ (Atw) + (4.43)\ (Atw) + (K)\ (Hw)\ (N+1)\ (\sqrt{Lw})$

C = Height of Curb above top of Top Slab
Hw = Height of Wingwall
K = Constant Value for use in formulas
Slope SL:1 K
6:1 ~ 10.41
Atw = Anchor Toewall Length
Lw = Length of Wingwall
N = Number of Culvert Barrels
S = Clear Span of each Barrel
SL:1 = Side Slope Ratio (Horizontal : 1 Vertical)

See applicable box culvert standard for H, S, T, and U values.

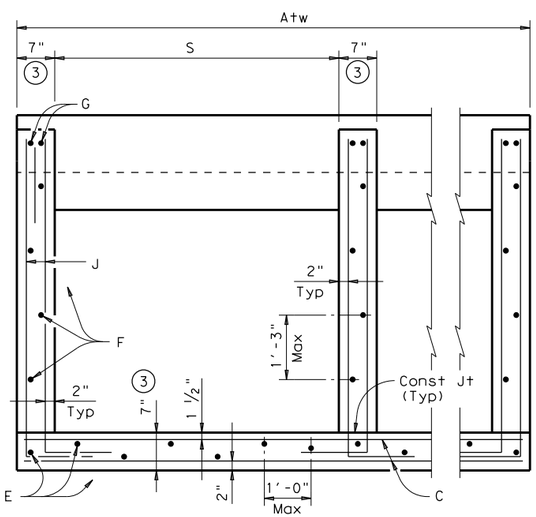

SECTION A-A

(Showing typical Wingwall and Wing Slab reinforcing)
(Pipe Runners not shown for clarity)

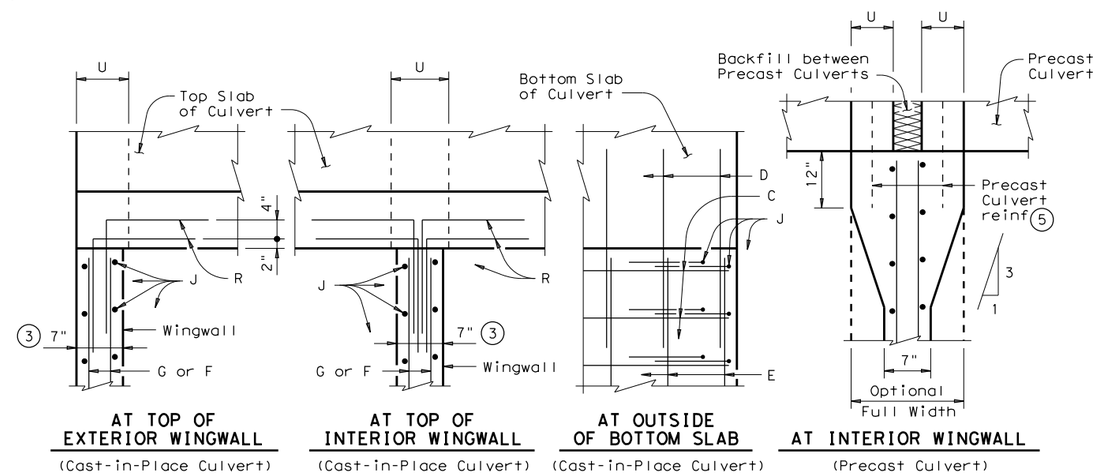

AT TOP OF EXTERIOR WINGWALL
(Cast-in-Place Culvert)

AT TOP OF INTERIOR WINGWALL
(Cast-in-Place Culvert)

AT OUTSIDE OF BOTTOM SLAB
(Cast-in-Place Culvert)

AT INTERIOR WINGWALL
(Precast Culvert)

PLAN VIEWS OF CORNER DETAILS

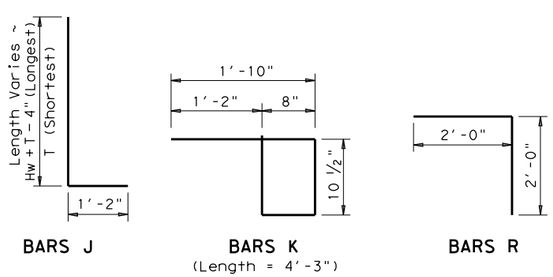

BARS J

BARS K
(Length = 4'-3")

BARS R

TABLE OF REINFORCING BAR SIZES & SPACING		
Bar	Size	Spacing
C	#4	10" Max
D	#4	match F & E
E	#4	1'- 0" Max
F	#4	1'- 3" Max
G	#6	Shown
J	#4	10" Max
K	#4	1'- 0" Max
R	#4	Shown

1. Slope will be 6:1 or flatter.
2. 0" min to 5'-0" max. Estimated curb heights are shown elsewhere in the plans. For structures without railing and curbs taller than 1'-0", refer to ECD standard.
3. Wingwall and slab thicknesses may be the same as the adjacent culvert wall and slab thicknesses (7" Minimum). If thicknesses greater than the minimum (7") are used, no changes will be made in quantities and no additional compensation will be allowed.
4. For vehicle safety, curbs shall project no more than 3" above finished grade. Curb heights shall be reduced, if necessary, to meet these requirements. No changes will be made in quantities and no additional compensation will be allowed for this work.
5. For Culverts with C = 0", the precast culvert reinforcing may extend 1'-0" minimum into Wingwall. Wingwall Bars D and R may be omitted. Otherwise, refer to the "Wingwall Connection Detail" on the SCP-MD standard.

GENERAL NOTES:

Designed according to AASHTO LRFD Specifications.

The Safety End Treatments shown herein are intended for use in those installations where out of control vehicles are likely to traverse the openings approximately perpendicular to the Cross Pipes.

Cross Pipes are designed for a traversing load of 10,000 pounds at yield as recommended by Research Report 280-2F, "Safety Treatment of Roadside Parallel-Drainage Structures", Texas Transportation Institute, March 1981.

All concrete shall be Class "C" and shall have a minimum compressive strength of 3600 psi.

All reinforcing steel shall be Grade 60. All reinforcing shall be adjusted as necessary to provide a minimum clear cover of 1 1/4".

The quantities for concrete, reinforcing steel, and Cross Pipes resulting from the formulas given herein are for Contractor's information only.

Cross Pipes, Sleeve Pipes, and Saddle Pipes shall conform to the requirements of ASTM A53 (Type E or S, Grade B), ASTM A500 (Grade B), or API 5LX52.

Bolts and nuts shall conform to ASTM A307.

All steel components, except the concrete reinforcing, shall be galvanized after fabrication. Galvanizing damaged during transport or construction shall be repaired in accordance with the specifications.

See BCS standard sheet for additional dimensions and information.

Alternate design drawings bearing the seal of a professional engineer will be acceptable for precast construction of the Safety End Treatments.

DISCLAIMER:
The use of this standard is governed by the "Texas Engineering Practice Act". No warranty of any kind is made by TxDOT for any purpose whatsoever. TxDOT assumes no responsibility for the conversion of this standard to other formats or for incorrect results or damages resulting from its use.

DATE: 9/23/2016 11:08:39 AM
FILE: T:\235T\1601\CADD\SHEETS\06-Drainage\Standards\setbpdse-1.dgn

SHEET 1 OF 2

Texas Department of Transportation — Bridge Division Standard

SAFETY END TREATMENT

FOR BOX CULVERTS
(MAXIMUM Hw = 7'-0")
TYPE I ~ PARALLEL DRAINAGE

SETB-PD

FILE: setbpdse.dgn	DN: GAF	CK: CAT	DW: JRP	CK: GAF
©TxDOT February 2010	CONT	SECT	JOB	HIGHWAY
REVISIONS				SOUTHLAND
	DIST	COUNTY		SHEET NO.
		TOM GREEN		44