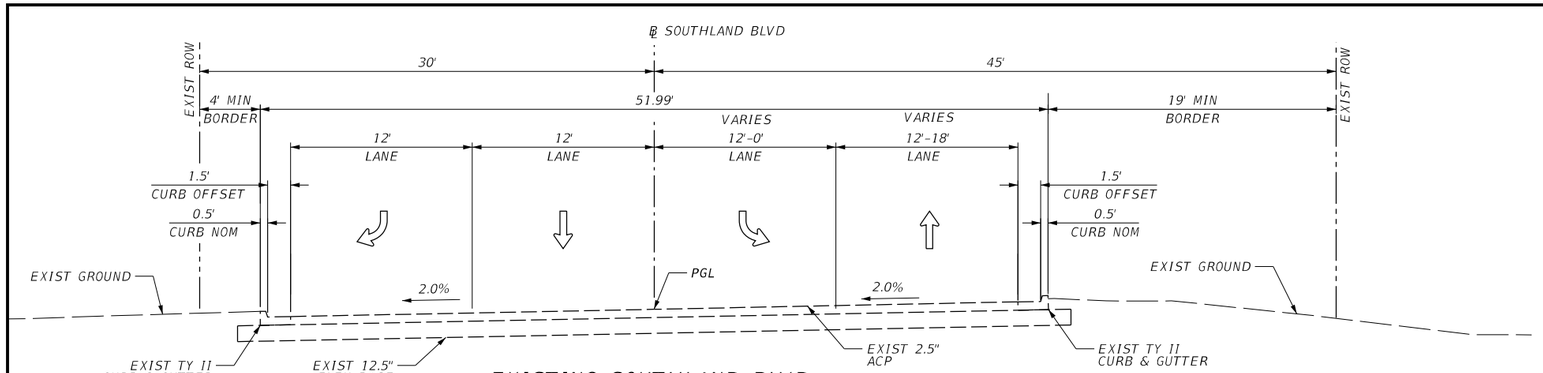

EXISTING SOUTHLAND BLVD

BEGIN TO STA 12+50

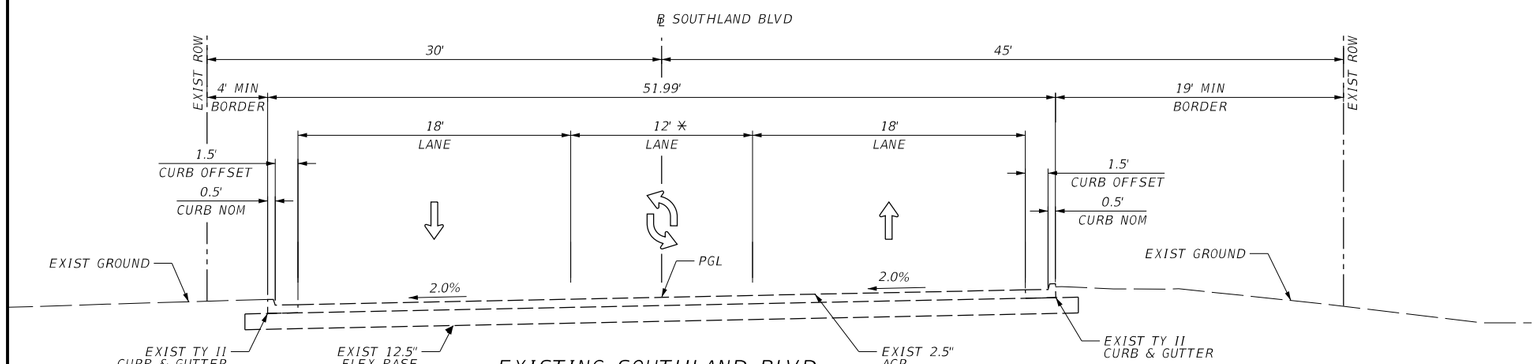

EXISTING SOUTHLAND BLVD

STA 12+50 TO END

* CTWLTL VARIES FROM STA 11+51 TO 11+73

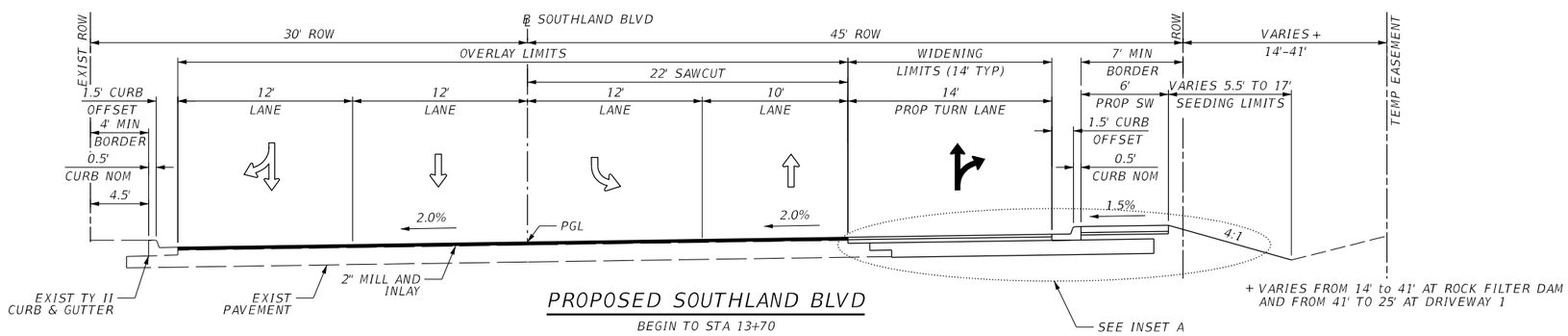

+ VARIES FROM 14' to 41' AT ROCK FILTER DAM AND FROM 41' TO 25' AT DRIVEWAY 1

PROPOSED SOUTHLAND BLVD

BEGIN TO STA 13+70
STA 16+43 TO END

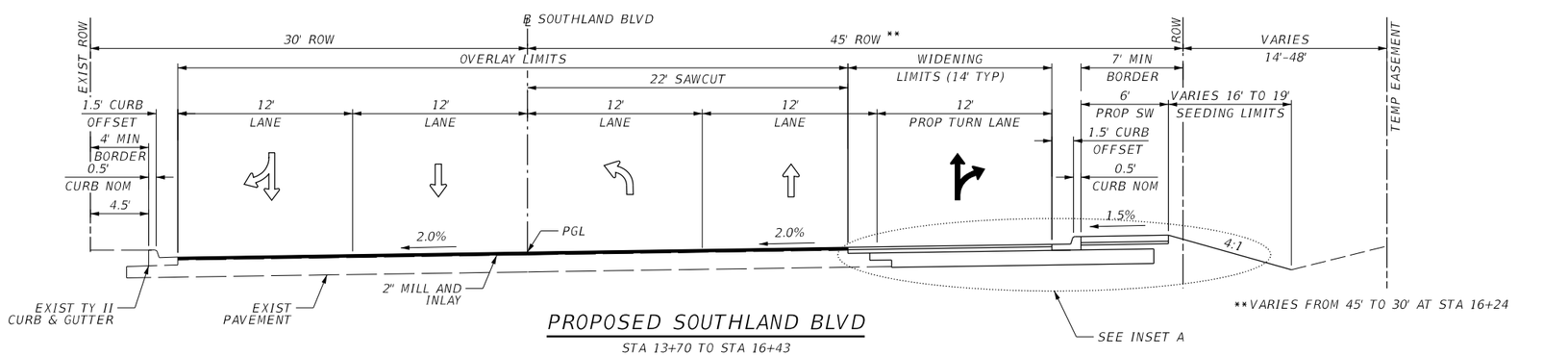

**VARIES FROM 45' TO 30' AT STA 16+24

PROPOSED SOUTHLAND BLVD

STA 13+70 TO STA 16+43

LEGEND

⇦	EXISTING DIRECTION OF TRAFFIC
⬅	PROPOSED DIRECTION OF TRAFFIC
FC-FC	FACE OF CURB TO FACE OF CURB

INSET A

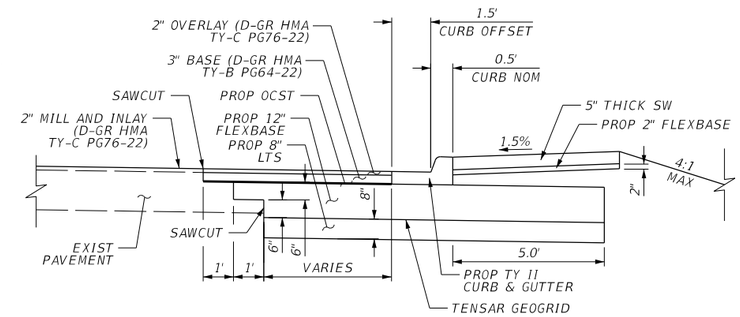

09/23/2016

STATE OF TEXAS
MICHAEL C. COYLE
95634
LICENSED PROFESSIONAL ENGINEER

NOT TO SCALE

REV. NO.	DATE	DESCRIPTION	BY

LJA Engineering, Inc.
FRN-F-1386

THE CITY OF SAN ANGELO TEXAS

SOUTHLAND BOULEVARD

TYPICAL SECTIONS

SHEET 1 OF 1

SHEET NO. 4

11:07:15 AM 9/23/2016
T:\2357\1601\CADD\SHEETS\02-General\SB-GTY01.dgn